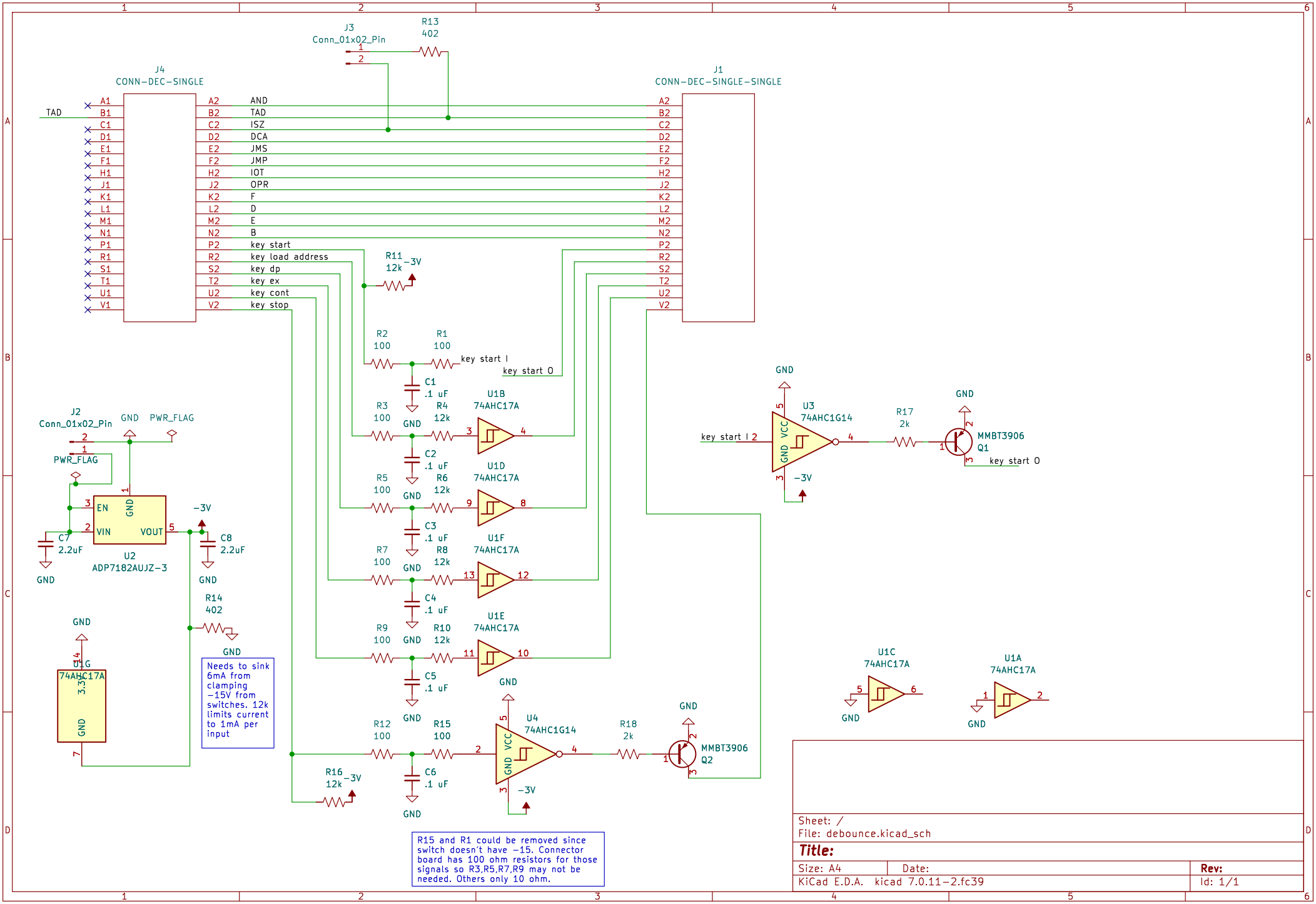
J3
Conn_01x02_Pin
R13
402
J4
CONN-DEC-SINGLE
J1
CONN-DEC-SINGLE-SINGLE
TAD
AND
TAD
ISZ
DCA
JMS
JMP
IOT
OPR
F
D
E
B
key start
key load address
key dp
key ex
key cont
key stop
R11
12k
-3V
R2
100
R1
100
key start I
key start O
C1
.1 uF
U1B
74AHC17A
R3
100
R4
12k
GND
C2
.1 uF
U1D
74AHC17A
R5
100
R6
12k
C3
.1 uF
U1F
74AHC17A
R7
100
R8
12k
C4
.1 uF
U1E
74AHC17A
R9
100
R10
12k
C5
.1 uF
R12
100
R15
100
U4
74AHC1G14
R18
2k
MMBT3906
Q2
C6
.1 uF
R16
12k
-3V
U3
74AHC1G14
R17
2k
MMBT3906
Q1
key start I 2
key start O
J2
Conn_01x02_Pin
PWR_FLAG
EN
VIN
VOUT
U2
ADP7182AUJZ-3
C7
2.2uF
C8
2.2uF
R14
402
U1G
74AHC17A
Needs to sink 6mA from clamping -15V from switches. 12k limits current to 1mA per input
U1C
74AHC17A
U1A
74AHC17A
R15 and R1 could be removed since switch doesn't have -15. Connector board has 100 ohm resistors for those signals so R3,R5,R7,R9 may not be needed. Others only 10 ohm.
Sheet: /
File: debounce.kicad_sch
Title:
Size: A4
Date:
Rev:
KiCad E.D.A. kicad 7.0.11-2.fc39
Id: 1/1